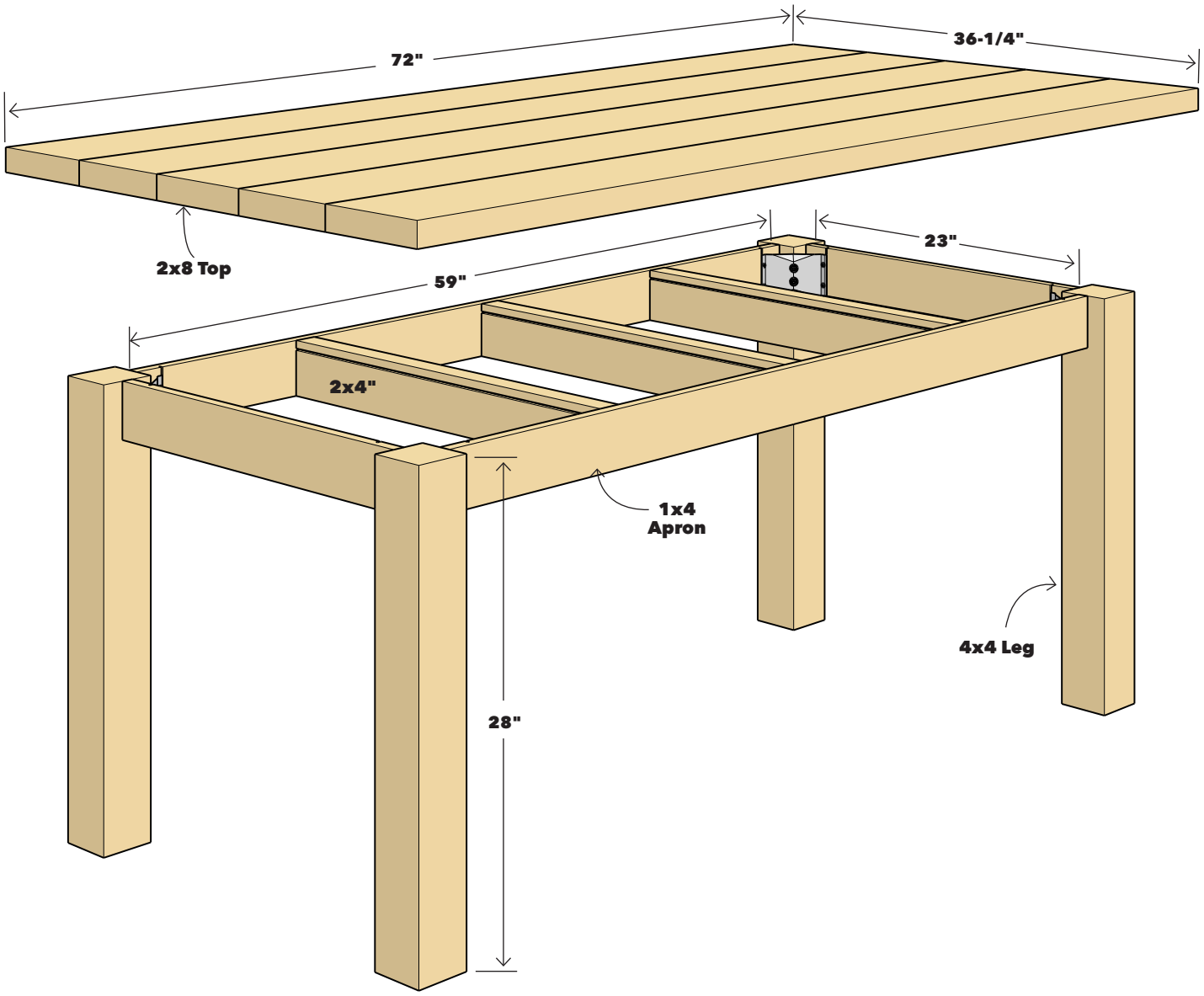
72"
36-1/4"
2x8 Top
59"
23"
2x4"
1x4
Apron
4x4 Leg
28"

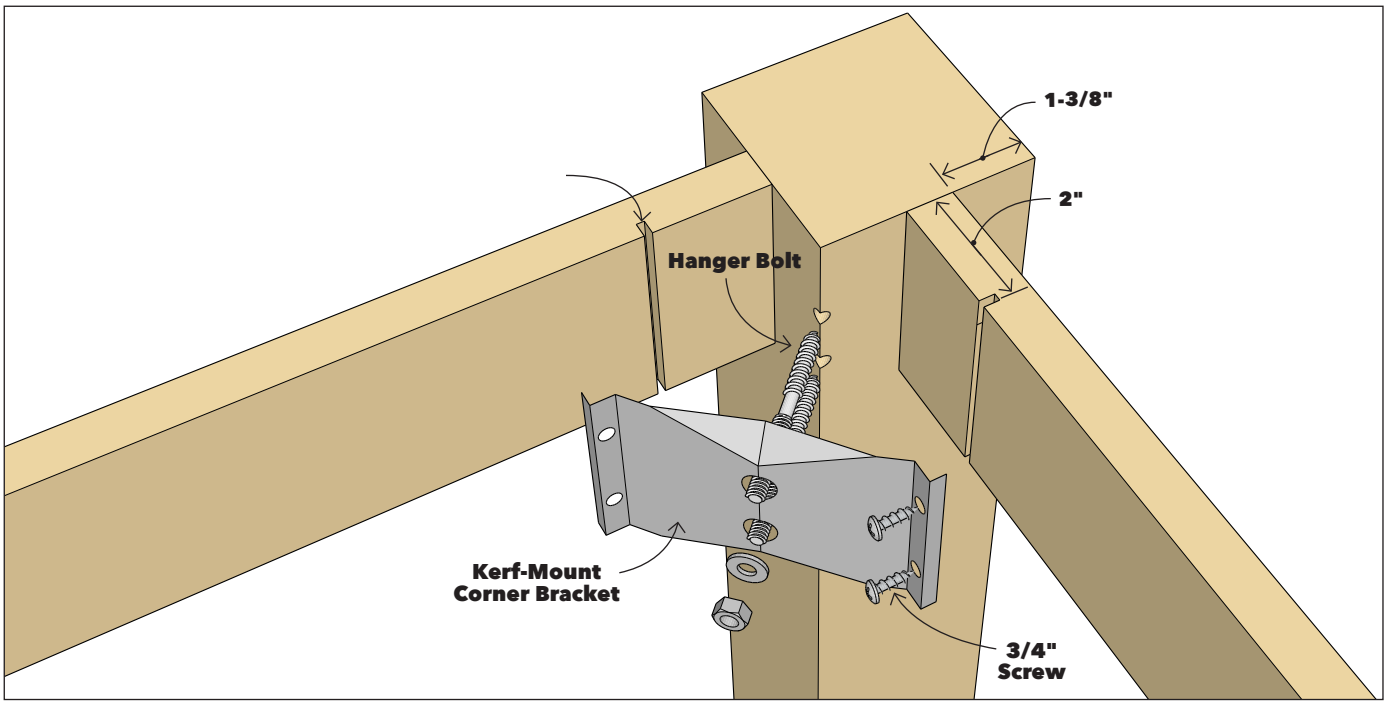
1-3/8"
2"
Hanger Bolt
Kerf-Mount
Corner Bracket
3/4"
Screw

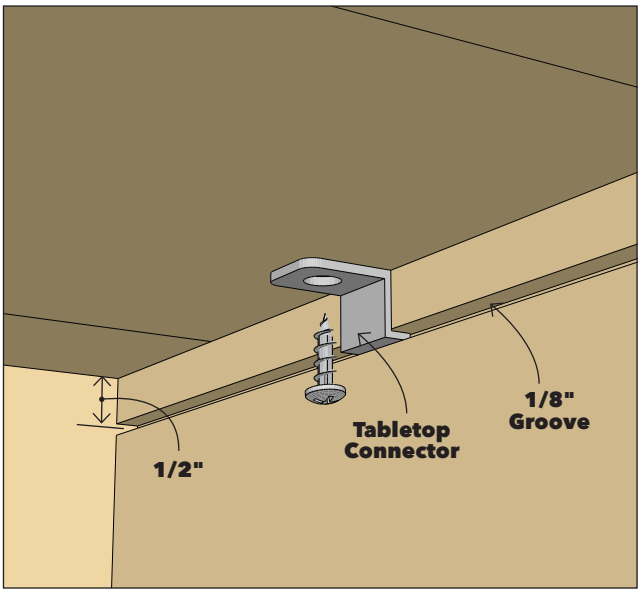
1/2"
Tabletop
Connector
1/8"
Groove